REVISION HISTORY			
REV	DESCRIPTION	DATE	APPROVED

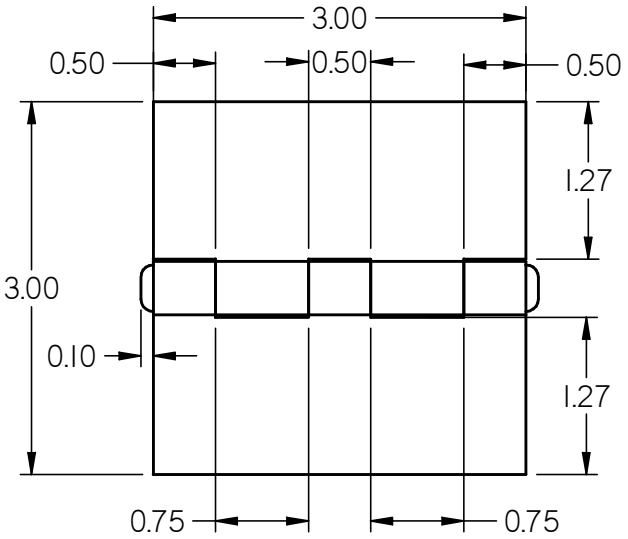

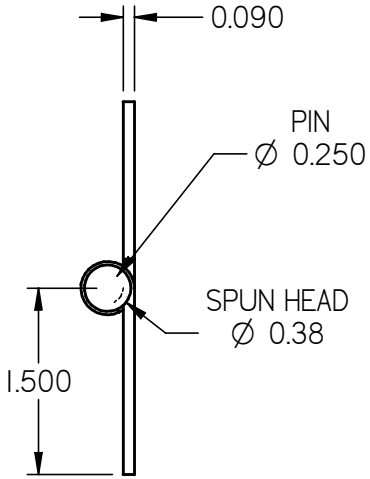

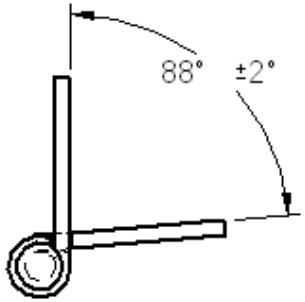

FULLY OPENED VIEW

FOR QUOTATION PURPOSES ONLY
DO NOT USE FOR PRODUCTION

NOTES:

1. MATERIAL: TYPE 304 STAINLESS STEEL
2. FINISH: 2B MILL
3. SCALE: 1:1 (DO NOT SCALE)
4. PIN RETENTION: SPUN ON BOTH ENDS

NMT Systems

CE DOCUMENT AINSI QUE SON CONTENU SONT LA PROPRIETE DE NMT

CE DOCUMENT CONTIENT DE L'INFORMATION CONFIDENTIELLE PROTEGEE EN DROIT, TOUTE REPRODUCTION, DISTRIBUTION, UTILISATION OU COMMUNICATION DE CE DOCUMENT OU DE SON CONTENU SANS CONSENTEMENT EXPRESS SONT STRICTEMENT INTERDITES.

THIS DOCUMENT AND ITS CONTENTS ARE THE PROPERTY OF NMT

THID DOCUMENT CONTAINS CONFIDENTIAL PROPRIETARY INFORMATION. THE REPRODUCTION, DISTRIBUTION, UTILISATION OR THE COMMUNICATION OF THIS DOCUMENT OR ANY PART THEREOF, WITHOUT EXPRESS AUTHORISATION IS STRICTLY FORBIDDEN.

REMOVE ALL BURRS & BREAK ALL SHARP EDGES

ALL DIMENSIONS ARE IN INCHES UNLESS OTHERWISE SPECIFIED

	NAME	DATE
DRAWN	TOM	10/06/08
CHECKED		

DWG NO: BSS3030096-PR
REV: PA

TITLE: BUTT HINGE

TOLERANCES	
X.X	±0.060
X.XX	±0.030
X.XXX	±0.015
ANGLES	±1.0°
HOLES	±0.005

THIRD ANGLE PROJECTION

SHEET 1 OF 1

SCALE: N.T.S.

SIZE: B